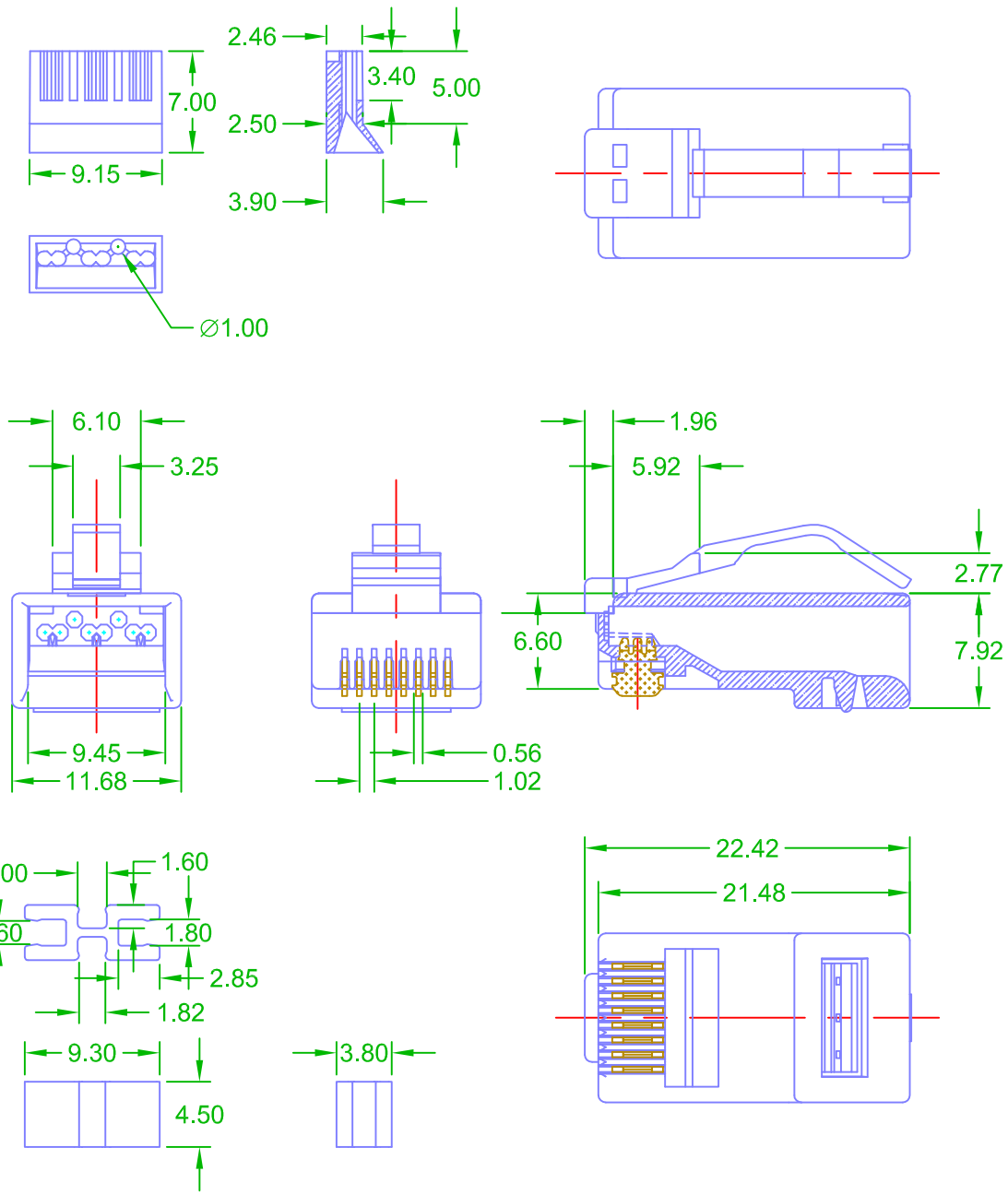

Drawing Number:P8-027-5-□□□□□

1. Housing Material:Polycarbonate, UL Flammability Rating:
   ⓪=UL 94V-0, RoHS Compliant.
   ②=UL 94V-2, RoHS Compliant.
2. Contacts Type: ①=Straight pin fits Stranded wire only.
   ②=Two prong angled pin fits Solid/Stranded Wires.
   ③=Three prong pin fits Solid/Stranded Wires.
3. Gold Plating: Ⓕ= Fu"(Flash), Ⓐ=2-3u"(0.0508μm≦A≦0.0762μm),
   Ⓗ= 3u"(≧0.0762μm), Ⓑ= 6u"(≧0.1524μm),
   Ⓒ=15u"(≧0.381μm), Ⓓ=30u"(≧0.762μm),
   Ⓔ=50u"(≧1.27μm).
4. Packaging Quantity: Ⓢ=1000pcs, Ⓣ=500pcs, Ⓤ=250pcs, Ⓥ=200pcs
   Ⓦ= 100pcs, Ⓧ= 50pcs, Ⓨ= 25pcs, Ⓩ= 10pcs
   Ⓠ= Other
5. Housing Color:Transparent ,other colors are available.
   (Red=RD, Orange=OR, Yellow=YL, Green=GN, Blue=BL, Purple=PU, Black=BK)
6. Shielded Material : Brass with nickel plated, or Non-Shielded.
7. Operating Temperature:-10°C to 60°C.

NO:PX-0XX-□□□□□
- Housing Material(0,2)
- Contacts type(1,2,3)
- Gold plating(F,A,H,B,C,D,E)
- Packaging Quantity(S,T,U,V,W,X,Y,Z)
- Housing Color(RD,OR,YL,GN,BL,PU,BK)

□Straight pin □Two prongs pin □Three prongs pin

NOTE TOL:±0.1

B	2018.09.26. Rescheduling coding	3RD		Drawing	Chidy	Date	2018/01/18	UL Code	8P8C-A2
A	An initial version	Unit	m/m	Checked	Chris	Date	2018/01/18	Description	
Rev	Descripion	Scale	1:1	Approved	Jason	Date	2018/01/18	F 2 Layers with insert and divider, ARC Latch	

Plug Master INDUSTRIAL CO.,LTD
www.plugmaster.com.tw